LTD «ADClab»

Digital multimeter
Flash-Recorder-3M6

BRIEF
TECHNICAL DESCRIPTION
And
OPERATING INSTRUCTION

2023

Preface

The device runs under the linux operating system based on the ARM processor. It has the widest capabilities defined by the linux OS. The software can be updated and changed by customer's request, as a part of technical task or under a separate contract. The standard software package provides the ability to operate the device via an Ethernet network interface within the SCP protocol.

To view and edit the arc_s.ini configuration file, use the Notepad++ program. Other programs may add unreadable characters to the file that will not be read correctly.

Content

Introduction

The device is designed to record various processes (pressures, accelerations, temperatures, electrical parameters (currents, voltages), etc.). The device is installed directly in the workplace or at the test facility where information is recorded and stored (USB flash memory) long.

At the end of the experiment, the USB flash drive can be removed and read into the memory of a PC or a laptop to view and process the registration results.

Unique solutions provide information recorded on a USB flash drive directly from the disk, without copying it to the computer's hard drive, which significantly saves time. The constant increase of the memory amount and simultaneous price reduction of a USB flash drive makes this solution very attractive.

Programming the operating modes of the device via a USB flash drive or over Ethernet network allows a user easily and quickly set the operating parameters by simply changing the USB flash drive in the device or remotely via the Internet.

Fields of application

According to your requirements our programmers can add new functions to the software of digital I/O lines. The software supplied with the device is constantly updated and improved. Updates are published on our website: www.ADClab.ru

Combining this device with other equipment produced by ADClab Ltd, your computer turns into a powerful information and measurement system capable of solving a great number of applied tasks.

This devices line can operate as data logger that registers information at internal memory, external storage, or transmits data to the Cloud service. Data is stored long. Information is received from a sensor or a sensor built in the device as well as external tools.

Fields of application:

- **Test benches;**
- **Research institutions;**
- **Manufactures;**
- **Transportation;**
- **Construction;**
- **Agriculture;**
- **Laboratories;**
- **Security;**
- **Energetic;**
- **Medicine.**

Pic. 1 The Device design

«Digital multimeter Flash-Recorder-3M6» set:

Tab.1

№№	Name	Quantity	Note
1	Digital multimeter Flash-Recorder-3M6	1	
2	Connector	1	DHK250-3
3	Connector	2	DHK350-2
4	Connector	1	DHK350-6
5	Connector	1	DHK381-2
6	USB Flash-disk 16 Gb	1	32-128 Gb optional
7	Cable USB2.0	1	1,8 м
8	Cable UTP	1	1,5 м
9	Certificate	1	Booklet

Technical details «Flash-Recorder-3 M6»

Tab.2

Case		Aluminium
Analog input channels (multiplexed)	With a common wire	1-32 (8 output to terminal blocks)
	Differential	1-16
ADC resolution, bit		2x16
Amplifier	Gain factors	1,2,5,10
Input resistance		Not less than 1 MOm
Bandwidth (-3dB)		Not less than 10 kHz
Maximum polling frequency in single-channel mode when collecting via USB flash drive		180 kHz per ch./N-channels)
Input signal ranges	Bipolar, by voltage	± 10 V; ±5V; ±2V; ±1V
Measurement voltage error for the range ±10V		Not more than ±0,1%
Measurement voltage error (1Hz-1kHz) for the range of □10V		Not more than ±0,1%
Input overload protection		± 30V
Device Management Interface		Ethernet 10/100Mbps or USB2.0
Remote operation		Up to 50 meters via Ethernet
Power supply from 18 up to 36, current, mA		Not more than 300
Operating conditions	Temperature	-30... +50 °C
	Humidity	40...85 %
Dimensions	length/ width/ Height	165 mm/ 92 mm/ 68 mm
Weight		700 g

Connectors and assignment of contacts

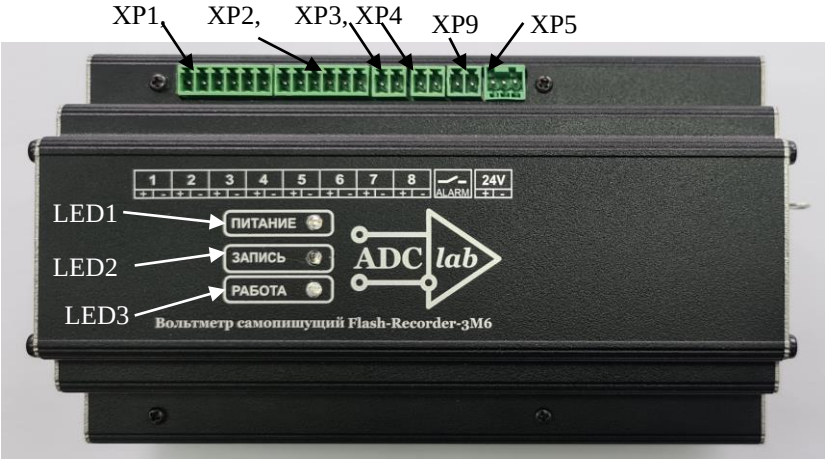

Pic.2 The upper panel of the device

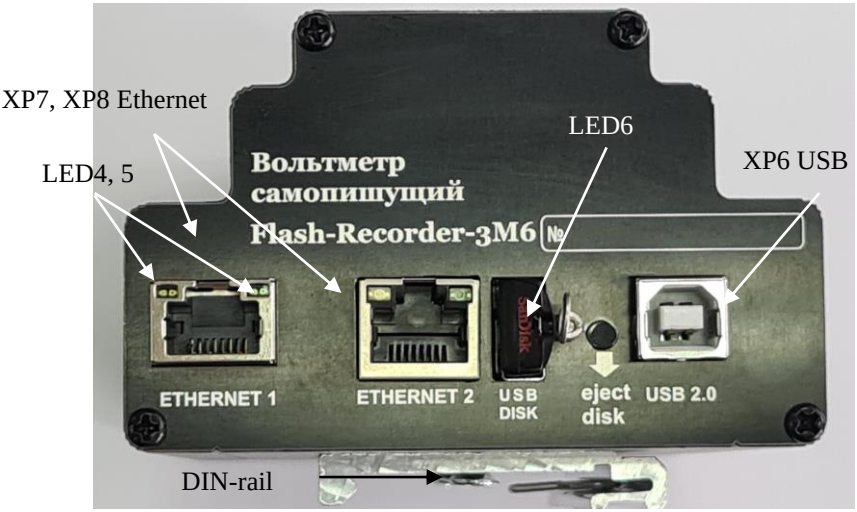

Pic.3 The front panel of the device

Tab. 3

Connectors	Type	Appointment
XP1, XP2	DHK350-6	Analog inputs 1, 2, 3, 4, 5, 6
XP3, XP4	DHK350-2	Analog inputs 7, 8
XP5	DHK250-3	Output power supply +18…+36V
XP6	USB-A	Connectors for an external USB drive
XP7, XP8	RJ-45	Connectors for Ethernet of a computer to operate in the mode of setting data collection and reading modes
XP9	DHK381-2	Alarm output "dry contact"
XP10	DB-37M	Analog inputs 1-32
LED 1	-	External power indication
LED 2	-	Indication of the recording process
LED 3	-	Indication of the device operation
LED 4	-	Ethernet connection indication
LED 5	-	Indication of the set speed of 100 MB/s
LED 6	-	Indication of writing to a flash disk

Assignment of connector contacts

Measuring channel inputs 1-8 : connectors **XP1, XP2, XP3, XP4**

The contacts of the connectors are indicated on the nameplate with the specified polarity.

Output power supply: XP5, type – DHK381-2:

Pin	Circuit
1	Output power supply from +18 up to +36 V not less than 0,5 A
2	Standby
3	Common

Connector for USB port of a PC: XP6, type A-:

Pin	Circuit
1	+5 V
2	D-
3	D+
4	Common

Connector for Ethernet PC: XP7, XP8, type RJ45:

Pin	Circuit	Appointment
1	RX+	Data receipt +
2	RX-	Data receipt -
3	TX+	Data Transmission+
4	-	-
5	-	-
6	TX-	Data Transmission -
7	-	-
8	-	-

LED 1 lights up when the device is connected to power source;
LED 2 flashes when recording a file, switches off when there is no recording;
LED 3 flashes after loading the device and starting work according to the settings in the config. file parameters;
The LED 4.5 displays the connection to the Ethernet network, this connector has a configured static address: ip 192.168.1.10
Ethernet 2 has a configured dynamic IP address received by an external DHCP server or router;

Alarm output connector "dry contact" XP9

Pin	Circuit
1	Up to 10V max 100 mA
2	Up to 10V max 100 mA

Pic.4 Connector XP10

Analog channels input 1-32

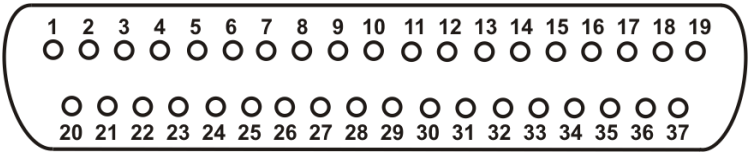

Pic.5 Connector XP10

Assignment of analog input connector pins XP10 (tab.4)

Pin number	Assignment of the Differential mode-non-inverting inputs (single-pole mode)	Pin number	Assignment of the Differential mode-inverting inputs (single-pole mode)
1	Input AX1 (Input 1)	**20**	Input AY1 (Input 17)
2	Input AX2 (Input 2)	**21**	Input AY2 (Input 18)
3	Input AX3 (Input 3)	**22**	Input AY3 (Input 19)
4	Input AX4 (Input 4)	**23**	Input AY4 (Input 20)
5	Input AX5 (Input 5)	**24**	Input AY5 (Input 21)
6	Input AX6 (Input 6)	**25**	Input AY6 (Input 22)
7	Input AX7 (Input 7)	**26**	Input AY7 (Input 23)
8	Input AX8 (Input 8)	**27**	Input AY8 (Input 24)
9	Input BX9 (Input 9)	**28**	Input BY9 (Input 25)
10	Input BX10 (Input 10)	**29**	Input BY10 (Input 26)
11	Input BX11 (Input 11)	**30**	Input BY11 (Input 27)
12	Input BX12 (Input 12)	**31**	Input BY12 (Input 28)
13	Input BX13 (Input 13)	**32**	Input BY13 (Input 29)
14	Input BX14 (Input 14)	**33**	Input BY14 (Input 30)
15	Input BX15 (Input 15)	**34**	Input BY15 (Input 31)
16	Input BX16 (Input 16)	**35**	Input BY16 (Input 32)
17	AGND 32- analog ground for common ground mode (single-pole)	**36**	AGND B - analog channel B ground
18	reserve	**37**	AGND A - analog channel A ground
19	EXT_ST The input of an external trigger, the active level "0", is triggered via declining	**-**	

1) Inputs with the designation AX1-AX8 non-inverting inputs of the 1st ADC; BX9-BX16 – non-inverting inputs of the 2nd ADC ; AU1-AY8 – inverting inputs of the 1st ADC; BY9-BY16 – inverting inputs of the 2nd ADC for differential mode
2) In the 32-channel (pseudo-differential) mode, analog ground with the designation AGND32 must be used for analog signals, connection with AGND A and AGND B is provided
3) In the 16-channel (differential) mode for analog signals, use analog ground with the designation AGND A and AGND B, respectively
4) For the convenience of working with the software and the device connectors, the numbering of channels begins with 1.

Pic. 6 Functional device diagram:

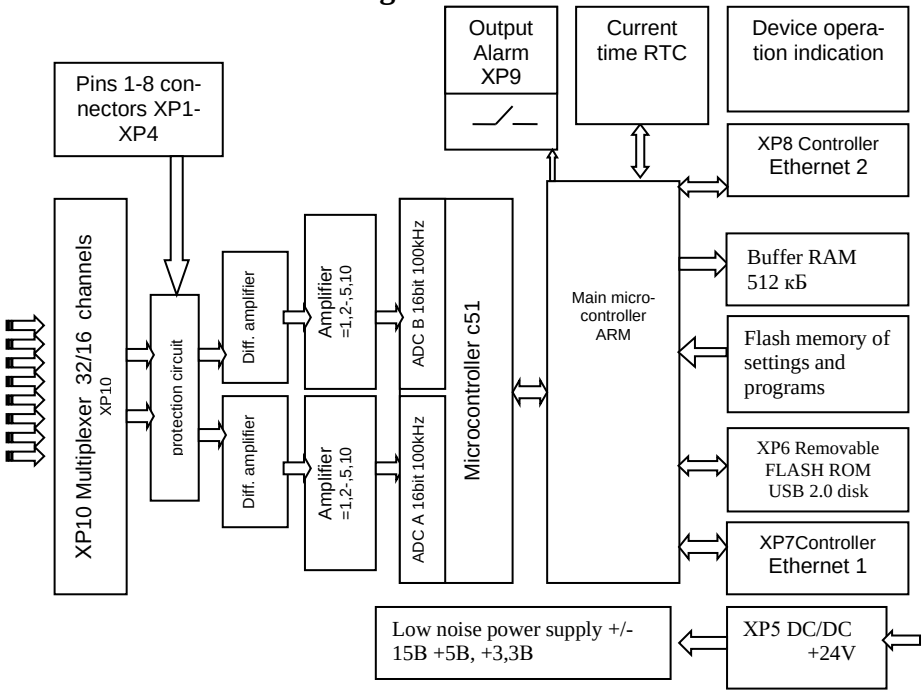

The composition of the device software:

1. **Configuration file editing program Notepad++;**
2. **Processing and recording program “LookDevs.EXE”**
3. **The program «LookALF.EXE» views files with data in ALF format**
4. **Examples of a device configuration file**
5. **The program to check the operation of the device when connected via USB port - ADCtest**
6. **Drivers under windows XP/7/10**
7. **Examples of programming in C++**

You can download all programs and examples from our website www.ADClab.ru in the section software/ standard software

General principles of the device operation

After turning on power, the device loads the linux operating system along with the drivers and startup programs. When booting, the data acquisition program searches for a connected external disk on the USB port of the device and, in its absence, turns on the standby mode for connecting the flash disk to the USB port. If there is a disk, the program reads the configuration file of the device or, in its absence, records an ini file of configuration settings with default parameters, in this case, a user has to make configuration file changes or check correctness of the parameters set by default.
The configuration file can be edited in the notepad++ text editor program or similar.

Having checked the correctness of the entries in the text ini file, in which a user enters his own parameters for the experiment, the device reads the configuration file from the installed flash disk and starts data collection with the parameters specified in the ini file.

The correctness of the set parameters can be checked by opening the recorded log file in a flash disk or sent to a remote computer (depending on the parameter specified in the configuration file, see the configuration file, SYSTEM section, Log subsection).

An example and description of the parameters of the ini file is below. When a signal enters the input of the device that goes beyond the threshold values set in the ini file which can be called comparator levels, a data file containing the prehistory and history of the event with the length defined by the configuration file will be recorded. It should be noted that the response threshold levels are set by the effective voltage values calculated from the analysis time condition, i.e. the number of periods set during analysis (the average value of the effective voltage).

In the single collection mode, one file will be recorded, in the cyclic collection mode, files will be recorded one after another until the signal exceeds the limits of acceptable values. When a signal is set within acceptable values, the device will add the history according to the file volume specified in the configuration and stop recording.

There is another parameter that affects the inclusion of a signal recorded in the file - this is the buffer volume to check the recording conditions, indicated in the config file as **ptimebufproc** in the **Proc** section. This parameter determines the analyzing time of the signal output beyond the specified threshold value. If a signal goes beyond the set threshold value for a time not exceeding the analysis time, then recording will not be performed vice versa, if it goes beyond the limits for a time longer than the analysis time of the recording condition, the signal will be recorded with the background and history given in the config file.

Operating with configuration file

Sections of the configuration file:

[SYSTEM]
Contains the device name;
[log] Logging options are described below;
[ADC] ADC parameters, data collection settings, are described below;
[proc] Data processing settings are described below;
[storage] Data recording parameters are described below;

Description of the configuration file:

; ini file for adc_server
; Default settings file. Automatically created first time you turn on the device with an empty USB flash drive
[SYSTEM] ; System Settings
SysName=Test2749 ; Device name. Used in the file name and can be set by a user
PIN_ERR=11; ; GPIO contact for alarm, service setting**, can't be changed**
PIN_OK=13; ; GPIO contact for correct operation, service setting, **can't be changed**
PIN_CTRL1=15 ; external control contact. GPIO, active low, service setting, **can't be changed**
PIN_BTNCANCEL=22; GPIO contact for connecting the flash drive safe shutdown button, service setup, **can't be changed**
HEARTBEAT=3600 ; the interval of logging the operating state of the system in seconds generates messages about the remaining disk space in % or the amplitudes of the comparator, which can be recorded in a logging file or sent to a remote server, depending on the selected parameter - facility
[LOG] ; Logging options
facility=4 ;facility local[3-7].
;3 - standard way.
;4 on USB
;5 log into distant host. Settings here: /etc/rsyslog.d/adc_server_log.conf (default 192.168.1.198)

LogLevel=7 ; Debugging message level:

;0 system is unusable– is not used
;1 action must be taken immediately- is not used
;2 critical conditions

;3 error conditions.
;4 warning conditions. with this level there are messages about the parameters being changed.
;5 normal but significant condition– standard data
;6 informational– full data
;7 debug-level messages – all the related messages. for debugging

[ADC] ;ADC settings
dRate=16000 ;ADC sampling rate (Hz)
sampling rate in Hz is the total sampling frequency of 16 kHz, can be set in the range from 0.2 to 100 kHz, divided by the number of channels, set as a multiple of 2, if a wrong number is set, the device will set the correct one and inform about the set number in the logging file;extStart=0
;launch source: 0/1 (internal/external signal);
SynchroMode=0 ;ADC mode: 0/1 (only A / A and B ADC);
ChnMode=0 ;Channels mode: 0/1 (single-pole/differential)
ChannelCount=16 ;number of channels(channel couples at SynchroMode=1) in the polling cycle. 1-16 (1-8 differential)

Chn=0,1,2,3,4,5,6,7,8,9,10,11,12,13,14,15,16,17,18,19,20,21,22,23,24,25,26,27,28,29,30,31 ; Channel order (synchronous couples of channels) in the frame. First channel - 0, second 1...(A0,A1,A2...)
; SynchroMode=1, odd numbers correspond to ADC channels B. (A0,B0,A1,B1...)

;Index(0-3) in the table of gain coefficients of selected channels. (The nominal values are the factory setting. For example the value 0=1,1=2,2=5,3=10)
KUChnADCA=0,0,0,0,0,0,0,0,0,0,0,0,0,0,0,0 ;ADC A
KUChnADCB=0,0,0,0,0,0,0,0,0,0,0,0,0,0,0,0 ;ADC B

```
[PROC]
          ;processing parameters
fProc=0                              ; processing mark 0/1/2 record without checking the condition 0/the average value -1/ the average quadratic value -2
timeBufProc=20                       ; time to check recording conditions, ms. (the size of the read block)
maskAnalyzeChannels=1,1,1,0,0,0,0,0,0,0,0,0,0,0,0,0,0,0,0,0,0,0,0,0,0,0,0,0,0,0,0,0 ; Mask of analyzed channels for recording condition

                                     ;ADC1 Arrays of maximum minimum threshold values recalculated to the system input.
ChnGateMaxA=10,10,10,10,10,10,10,10,10,10,10,10,10,10,10,10 ;maximal
ChnGateMinA=-10,-10,-10,-10,-10,-10,-10,-10,-10,-10,-10,-10,-10,-10,-10,-10   ;minimal

                                     ;ADC2 Arrays of maximum minimum threshold values recalculated to the system input.
ChnGateMaxB=10,10,10,10,10,10,10,10,10,10,10,10,10,10,10,10          ; maximal
ChnGateMinB=-10,-10,-10,-10,-10,-10,-10,-10,-10,-10,-10,-10,-10,-10,-10,-10   ; minimal

                                     ; ADC1 Calibration coefficients. Y physical value) = U * ChnMultA + ChnOffA
ChnGainA=1,1,1,1,1,1,1,1,1,1,1,1,1,1,1,1 ; multiplier
ChnOffsetA=0,0,0,0,0,0,0,0,0,0,0,0,0,0,0,0        ;offset
                                     ; ADC2 Calibration coefficients. Y physical value)= U * ChnMultB + ChnOffB
ChnGainB=1,1,1,1,1,1,1,1,1,1,1,1,1,1,1,1 ; multiplier
ChnOffsetB=0,0,0,0,0,0,0,0,0,0,0,0,0,0,0,0        ; offset


[STORAGE]                            ;recording parameters.
pathData=/media/usb/                  ; the path for writing data files. First, USB to control the ADC must be turned on.
modeCycle=0                           ; operation cyclicity. 0/1/2 single/ infinite cycle / infinite compressed recording cycle
```

Setting a single record (value=0) in the absence of a set processing mark fProc=0, the device records one file with specified data collection parameters, When the processing mark fProc=1 or 2 is set, after the event occurs, the device will record one file with the specified collection parameters and stop the collection.
When specifying cyclic recording, files will be recorded every time after the occurrence of an event.
When setting model Cycle=2 (infinite compressed recording cycle), the device will record files with specified parameters at each signal transition through specified trigger thresholds.

timeHistory=3 ; the duration of the history recording. Seconds
The parameter depends on the sampling frequency and can be selected from the range from 1 to 20,000 in increments of 1 second at 100 kHz sampling frequency respectively. It can be proportionally increased with a decrease in the sampling frequency. For example at 40 kHz sampling frequency of, the parameter can be set in the range from 1 to 50,000 sec. to obtain a daily record equal to 86400 sec., the sampling rate should be reduced to 20 kHz.

timeBHistory=3 ;the duration of the recording of the background. seconds. The parameter can be selected from the range from 1 to 10 in increments of 1 sec.
thFreeSize=30 ; the threshold of free space (%) at which the USB cleaning procedure is enabled
thNumFiles=10000 ; threshold of the number of stored files at which the USB cleanup procedure is enabled

Note:
If a parameter is set in the config file that the device cannot perform, for example, a sampling frequency of 99, 999 kHz is set, then the nearest possible option of 100 kHz will be set, the same is applied to the analysis time parameter that will be displayed in the logging file. Thus it is important to view the logging file when preparing for the experiment.